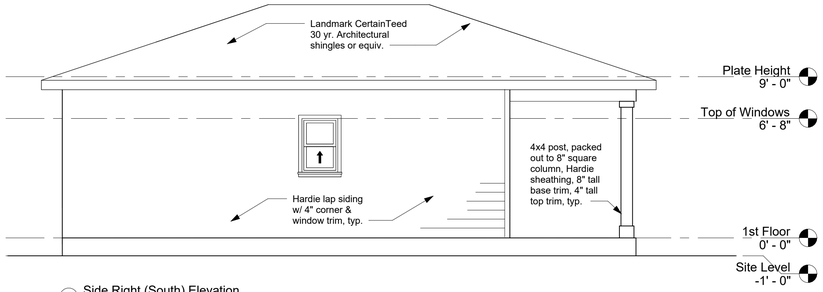

1 Side Right (South) Elevation
1/4" = 1'-0"

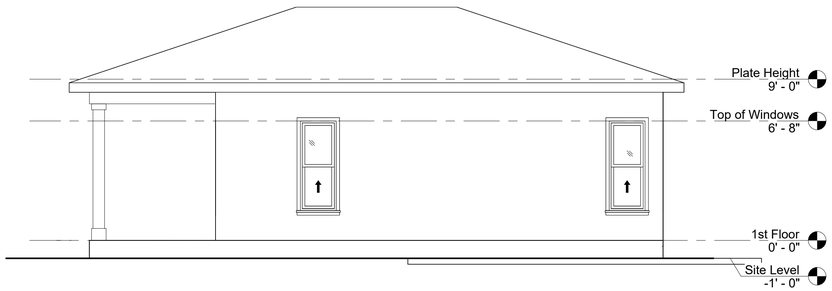

2 Side Left (North) Elevation
1/4" = 1'-0"

3 Front (East) Elevation
1/4" = 1'-0"

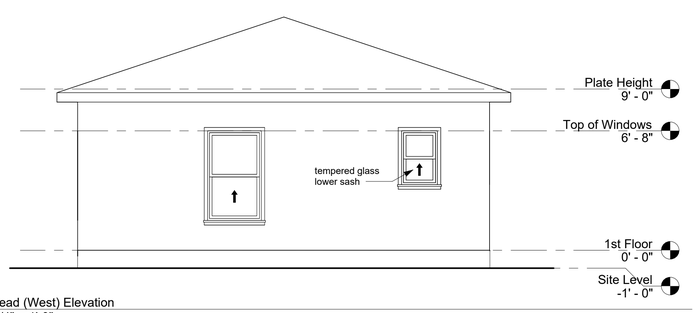

4 Read (West) Elevation
1/4" = 1'-0"

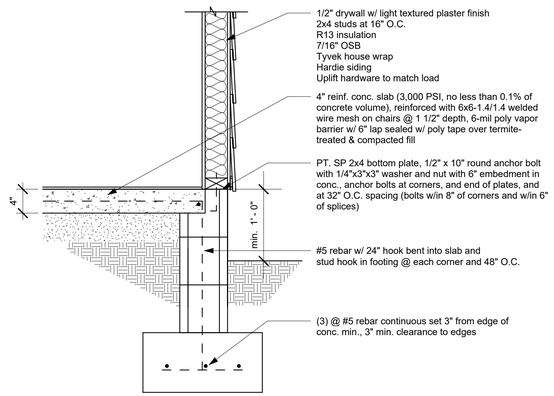

5 STEM WALL DETAIL, TYP.
1" = 1'-0"

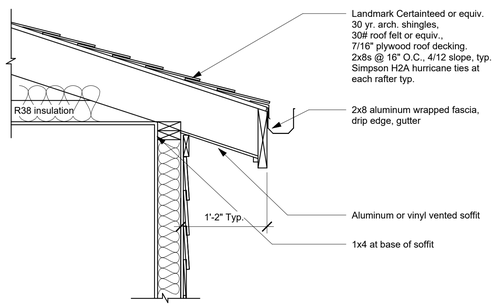

6 ROOF 1'-2" OVERHANG DETAIL TYP.
1" = 1'-0"

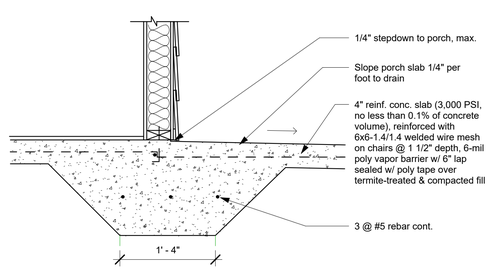

7 STEP DOWN IN SLAB AT PORCHES, TYP.
1" = 1'-0"

ADUs Selections & Specifications	
Item	**Specification**
Shingles	
Drip Edge	
Exterior Paint	
Body	
Trim	
Doors	
Interior Paint	
Main Walls	
Accesnt Walls (if applicable)	
Ceiling	
Trim	
Doors	
Kitchen Cabinets	
Bathroom Walls	
Windows	
Doors	
Exterior Doors	
Screen Doors	
Ext. door knobs (ADA if applicable)	
Interior Doors	
Int. door knobs (dummy + privacy) (ADA if applicable)	
Outlets/Cover Plates	
Appliances	
Refrigerator	
Range	
Microwave/hood	
Dishwasher	
Washer/Dryer (ADA if applicable)	
Kitchen	
Countertops	
Cabinets	
Knobs (ADA if applicable)	
Drawer Pulls (ADA if applicable)	
Backsplash	
Klitchen Sink	
Kitchen Faucet	
Flooring	
Restroom & Shower tile	
Shower walls	
Restroom & Shower floor	
Bathroom	
Sink and Counter (ADA if applicable)	
Light Fixture	
Toilet	
Mirrors	
Shower Trim Kit	
Shower Head Hand-Held (ADA if applicable)	
Sink Faucet	
Linear Drain	
Fan/Lights	
Curtain Rod	
Grab Bars (ADA if applicable)	
Light Fixtures	
Exterior Sconces	
Recessed Lights	
House address numbers	

8 Specifications, Appliances, Selections

PROJECT NAME:

Home Investment Partnerships ARP - City of Gainesville Accessory Dwelling Units

1106 B Morningside ADU, 1-Bed/1-Bath

OWNER: City of Gainesville
Department of Sustainable Development
306 NE 6th Ave, Thomas Center B
Gainesville, FL 32601
Tel. 352-334-5050

DEVELOPER: City of Gainesville
Office of Housing & Community Development
306 NE 6th Ave, Thomas Center B
Gainesville, FL 32601
Tel. 352-334-5026

SURVEYOR: JBPro
3530 NW 43rd St
Gainesville, FL 32606
Tel. 352-375-8999

DESIGNERS:

City of Gainesville
Department of Sustainable Development
306 NE 6th Ave, Thomas Center B
Gainesville, FL 32601
Tel. 352-334-5050

This Accessory Dwelling Unit (ADU) Construction Plan ("ADU Plans") was prepared by the City of Gainesville for general distribution to the public in an effort to promote affordable housing opportunities. Any person or entity that accepts or uses these generally-distributed ADU Plans ("User") agrees to assume any and all risks incidental to or inherent in such acceptance or use of the ADU Plans, and any and all use of or modification to the ADU Plans is the sole responsibility of the User. All construction pursued in accordance with the ADU Plans must comply with the applicable current building codes (FBC Residential 8th Edition 2023, as may be amended) and all applicable local codes and regulations. The City of Gainesville and its elected and appointed officials, officers, employees, and agents ("Released Parties") are not responsible for the ways and means of construction by the User or any of User's agents, employees, partners, contractors, or subcontractors, pursued in accordance with the ADU Plans, and the Released Parties provide no warranty and assume no liability for any acceptance or use of the ADU Plans.

By User's willful act of accepting or using the ADU Plans, User agrees to release and forever discharge the Released Parties of and from all liabilities, claims, suits, actions, damages, costs, or expenses of any nature arising out of or in any way connected with User's acceptance or use of the ADU Plans. User further agrees to indemnify and hold each of the Released Parties harmless against any and all such liabilities, judgments, losses, claims, actions, demands, damages, costs, fines, fees, expenses, liens, penalties, suits, proceedings, actions, costs of actions, and attorneys' fees for trial and on appeal (collectively, "Claims"), whether or not a lawsuit is filed, which Claims of any kind and nature are alleged or found to have arisen out of or to be in any way connected with User's acceptance and use of the ADU Plans or the use of the ADU Plans by any of User's agents, employees, partners, contractors, or subcontractors. User understands that this release and indemnity includes any claims based on any negligent act or omission, or reckless or intentional wrongful act or omission, of the Released Parties, and covers bodily injury (including death) and property loss or damage, before, during or after any acceptance of use of the ADU Plans.

DATE:	11/5/2025
PROJECT NUMBER:	1106 A Morningside ADU
PROJECT PHASE:	
SCALE:	As indicated

SHEET NAME
Elevations, Details

A3

DATE TIME STAMP: 12/17/2025 11:47:03 AM

FILE PATH: V:\Building\REVIT\ADU Project+ ADU Project Sets\PLANS FOR CITY TO HAND OUT\1106 B _ Morningside ADU\1106 B_Morningside ADU_1bed.rvt